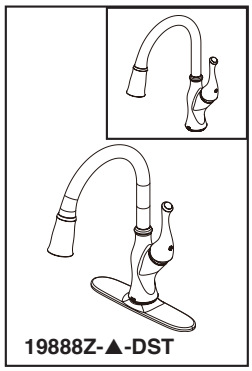

see what Delta can do℠

KITCHEN FAUCETS

■ Ophelia™ Collection
■ Single Handle Pull-Down

FEATURES:

- DIAMOND Seal® Technology
- Touch-Clean® Sprayhead
- MagnaTite® Magnetic Docking
- ShieldSpray™ Technology

STANDARD SPECIFICATIONS:

- Max. flow rate 1.8 gpm @ 60 PSI, 6.8 L/Min @ 414 kPa
- One or three hole mount (escutcheon included)
- Diamond coated ceramic cartridge
- 3/8" O.D. straight, staggered PEX supply lines
- Spout rotates 360˚
- Red/blue indicator markings
- Two-function wand; Aerated stream or spray
- Dual integral check valves in sprayer

WARRANTY

- Parts and Finish - Lifetime limited warranty; or for commercial purchasers, 10 years for multi-family residential (apartments and condominiums) and 5 years for all other commercial uses, in each case from the date the product is received by the original purchaser or their authorized representative (installation contractor, etc.).
- Electronic Parts and Batteries (if applicable) - 5 years from the date the product is received by the original purchaser or their authorized representative (installation contractor, etc.); or for commercial purchasers, 1 year from the date the product is received by the original purchaser or their authorized representative (installation contractor, etc.). No warranty is provided on batteries.
- Please go to www.deltafaucet.com for the complete details of our limited warranty.

COMPLIES WITH:

- ASME A112.18.1/ CSA B125.1
- ASME A112.18.6
- ♿ Indicates compliance to ICC/ANSI A117.1 - Valve control only

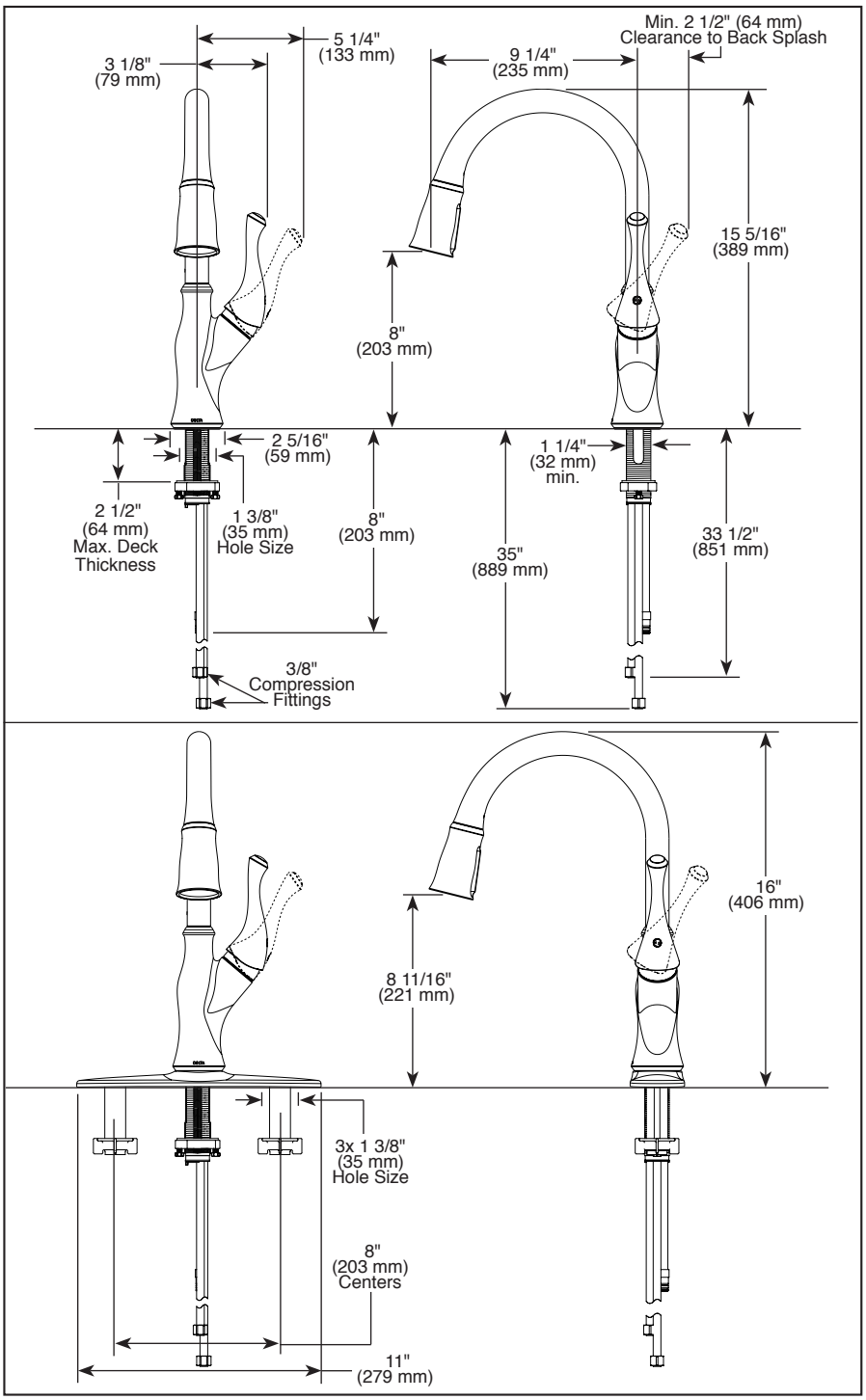

▲ Designate Proper Finish Suffix

Delta reserves the right (1) to make changes in specifications and materials, and (2) to change or discontinue models, both without notice or obligation. Dimensions are for reference only. See current full-line price book or www.deltafaucet.com for finish options and product availability.

DSP-K-19888Z-DST Rev. B

Delta Faucet Company
55 E. 111th Street, Indianapolis, IN 46280
350 South Edgeware Road, St. Thomas, ON N5P 4L1
© 2024 Delta Faucet Company